High Pressure cylinder connector (90' Dual Swivel)
Series No. SCC-BS341-3-NPT-4

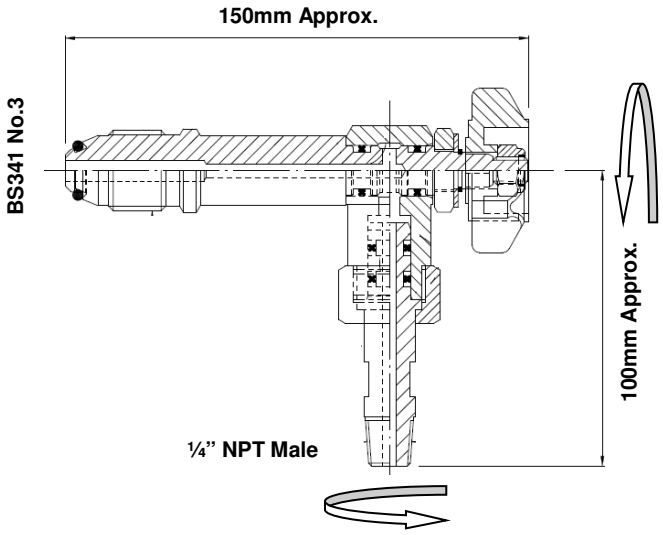

SCC-BS341-3-NPT-4

Description

- Dual Axis cylinder connector suitable for industrial and medical gas filling solutions
- 90 Degrees orientation
- Cylinder connectors available with a range of outlets (BS341,DIN, NEVOC, CGA, AFNOR etc.)
- This product has been designed to work at a maximum working pressure of 420 Bar

End Fittings/Connections

- ¼" NPT Fixed male inlet - Brass
- BS341 NO.3 (Others available) – Brass

- Available with RPV Override/ Actuator pin

Pressures

Design Pressure 420 Bar

Available Connections

Other standards available upon request		Typical Industrial gas applications			
Part Number	**Type No.**	**02 ***	**Insert ***	**Flammable ***	**Other (Specialty/Mixes)**
SCC-BS341-X	3,4,8 etc.	✓	✓	✓	Contact sales
SCC-NEVOC -X	30, 32 etc.	✓	✓	✓	Contact sales
SCC-DIN 477-X	3,4,8 etc.	✓	✓	✓	Contact sales
SCC-GCA-X	540,580 etc.	✓	✓	✓	Contact sales
SCC-XXX-X	Other	✓	✓	✓	Contact sales

Please note gas applications are standard specific, so connection/media type must be in accordance

Aeroflex Hose & Engineering Ltd.
Winchester House
11 Enterprise Way
Aviation Park West
Bournemouth Airport
Dorset BH23 6EW

T. 01202 895660
F. 01202 891177

www.aeroflex.co.uk

MEMBER
Certificate No. Q5377
Registered office: 902 Wimborne Road, Bournemouth BH9 2ND. Company registration no. 1506555.